PRODUCT SHEET

Description:
Shower Hinge "Lima", 135DG, Polished Brass, Glass/Glass,6-10 mm Glass Thickness, W/15 DG Angle Adjustment Function & 25DG, Return Function, Brass Material, Hidden Screws., Black Rubber Gaskets: 4 x 1mm & 4 x 2mm Thickness., Load Capacity Pr. Pair: 45kg

Item number:
15.26.815-8

Units	Box	Carton	HS Code	Barcode
Pcs.			8302100090	5704866519533

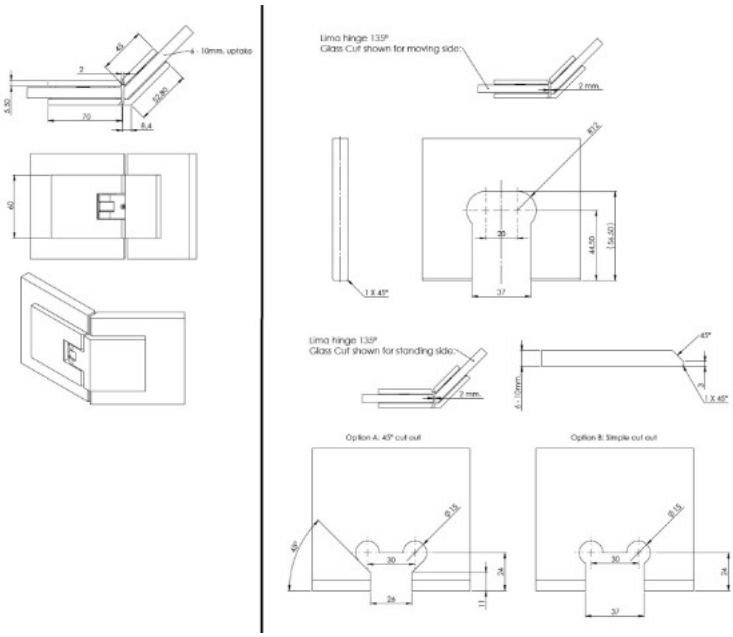

SISO A/S
Mileparken 11
DK-2740 Skovlunde
Denmark
VAT: 24786013

Phone +45 45 830 900

www.siso.dk
siso@siso.dk

Danske Bank
Nytorv Branch
Copenhagen
SWIFT: DABADKKK

Account no.
4180 3112 112936
IBAN Account
DK7230003112112936